SmartLine

Honeywell

Technical Information

STG800 SmartLine Gauge Pressure Specification 34-ST-03-83, February 2017

Introduction

Part of the SmartLine® family of products, the STG800 and STG80L are high performance gauge pressure transmitter featuring piezoresistive sensor technology combining pressure sensing with on chip temperature compensation capabilities providing high accuracy, stability and performance over a wide range of application pressures and temperatures. The SmartLine family is also fully tested and compliant with Experion® PKS providing the highest level of compatibility assurance and integration capabilities. SmartLine easily meets the most demanding application needs for pressure measurement applications.

Best in Class Features:

- Accuracy up to 0.055 % of calibrated span & 0.025% Opt.
- Stability up to 0.015% of URL per year for ten years
- Automatic temperature compensation
- Rangeability up to 100:1
- Response times as fast as 80ms
- Multiple local display capabilities
- External zero, span, & configuration capability
- Polarity insensitive electrical connections
- Comprehensive on-board diagnostic capabilities
- Integral Dual Seal design for safety based on ANSI/NFPA 70-202 and ANSI/ISA 12.27.0
- Full compliance to SIL 2/3 requirements as a standard.
- Modular design characteristics
- Available with 15 year warranty
- Plugged Impulse Line Detection Option
- Dual/Triple Calibration Option (HART & Fieldbus Only)

Figure 1 – STG800 Gauge Pressure Transmitters feature field-proven piezoresistive sensor technology

Communications/Output Options:

- 4-20mA dc
- Honeywell Digitally Enhanced (DE)
- HART ® (version 7.0)
- FOUNDATION™ Fieldbus

All transmitters are available with the above listed communications protocols.

Span & Range Limits:

Model	URL/Max Span psi (bar)	LRL psi (bar)	Min Span	Turn down
STG830/STG83L	50 (3.5)	-14.7 (-1.0)	0.5 (.35)	100:1
STG840/STG84L	500 (35)	-14.7 (-1.0)	5 (.35)	100:1
STG870/STG87L	3000 (210)	-14.7 (-1.0)	30 (2.1)	100:1
STG88L	6000 (420)	-14.7 (-1.0)	60 (4.2)	100:1
STG89L	10000 (690)	-14.7 (-1.0)	100 (6.9)	100:1

Description

The SmartLine family of gauge pressure, differential pressure, and absolute pressure transmitters is designed around a high performance piezo-resistive sensor. This one sensor actually integrates multiple sensors linking process pressure measurement with on-board static pressure (DP Models) and temperature compensation measurements resulting in the best total performance available. This level of performance allows the ST 800 to replace virtually any competitive transmitter available today.

Unique Indication/Display Options

The ST 800 modular design accommodates a basic alphanumeric LCD display or a unique advanced graphics LCD display with many unparalleled features.

Basic Alphanumeric LCD Display Features

- Modular (may be added or removed in the field)
- 0, 90,180, & 270 degree position adjustments
- Configurable (HART only) and standard (Pa, KPa, MPa, KGcm2, Torr, ATM, inH_2O, mH_2O, bar, mbar, inH_2O, inHG, FTH_2O, mmH_2O, mm HG, & psi) measurement units
- 2 Lines 16 Characters (4.13H x 1.83W mm)
- Square root output indication (√)

Advanced Graphics LCD Display Features

- Modular (may be added or removed in the field)
- 0, 90, 180, & 270 degree position adjustments
- Standard and custom measurement units available.
- Up to eight display screens with 3 formats are possible (Large PV with Bar Graph or PV with Trend Graph)
- Configurable screen rotation timing (1 to 30 sec)
- Display Square Root capabilities may be set separately from the 4-20mA dc output signal
- Unique “Health Watch” indication provides instant visibility of diagnostics
- Multiple language capability. (EN, DE, FR, IT, ES, RU, TR, CN, JP)

Diagnostics

SmartLine transmitters all offer digitally accessible diagnostics which aid in providing advanced warning of possible failure events minimizing unplanned shutdowns, providing **lower overall operational costs**

Configuration Tools

Integral Three Button Configuration Option

Suitable for all electrical and environmental requirements, SmartLine offer the ability to configure the transmitter and display via three externally accessible buttons when either display option is selected. Zero/span capabilities are also optionally available via these buttons with or without selection of a display option.

Hand Held Configuration

SmartLine transmitters feature two-way communication and configuration capability between the operator and the transmitter. This is accomplished via Honeywell’s field-rated Multiple Communication Configurator (MCT404).
The MCT404 is capable of field configuring DE and HART Devices and can also be ordered for use in intrinsically safe environments. All Honeywell transmitters are designed and tested for compliance with the offered communication protocols and are designed to operate with any properly validated hand held configuration device.

Personal Computer Configuration

Honeywell’s SCT 3000 Configuration Toolkit provides an easy way to configure Digitally Enhanced (DE) instruments using a personal computer as the configuration interface. Field Device Manager (FDM) Software and FDM Express are also available for managing HART & Fieldbus device configurations.

System Integration

- SmartLine communications protocols all meet the most current published standards for HART/DE/Fieldbus.
- Integration with Honeywell’s Experion PKS offers the following unique advantages.
  - Transmitter messaging
  - Maintenance mode indication
  - Tamper reporting
  - FDM Plant Area Views with Health summaries
  - All ST 800 units are Experion tested to provide the highest level of compatibility assurance

Modular Design

To help contain maintenance & inventory costs, all ST 800 transmitters are modular in design supporting the user's ability to replace meter bodies, add indicators or change electronic modules without affecting overall performance or approval body certifications. Each meter body is uniquely characterized to provide in-tolerance performance over a wide range of application variations in temperature and pressure and due to the Honeywell advanced interface, electronic modules may be swapped with any electronics module without losing in-tolerance performance characteristics.

Modular Features

- Meter body replacement
- Exchange/replace electronics/comms modules*
- Add or remove integral indicators*
- Add or remove lightning protection (terminal connection)*

* Field replaceable in all electrical environments (including IS) except flameproof without violating agency approvals.

With no performance effects, Honeywell's unique modularity results in ***lower inventory needs and lower overall operating costs.***

Plugged Impulse Line Detection:

STG800 models are offered with a PILD option which provides indication of a plugged impulse line or process connection. When used in conjunction with a basic or advanced display, a non-critical diagnostic indication appears on the integral display. For units without an integral display, an indication can be seen via the host or hand held device when HART Protocol is utilized.

Dual/Triple Calibration:

STG800 models are optionally offered with multiple calibrations. In lieu of a standard factory calibration, units can be supplied with 1, 2, or 3 customer specified calibrations. These calibrations are stored in the meter body and provide users with factory calibrated performance at up to three different calibrated ranges. This increases application flexibility without requiring any costly recalibration or additional inventory.

Performance Specifications

Reference Accuracy: (conformance to +/-3 Sigma)

Model	URL	LRL	Min Span	Maximum Turndown Ratio	Stability (%URL/Year)	Reference Accuracy [1,2] (%Span) Std / Opt.
STG830	50 psi (3.5 bar)	-14.7 psi (-1.0 bar)	0.5 psi (.035 bar)	100:1	0.010	0.055 / 0.025%
STG83L	50 psi (3.5 bar)	-14.7 psi (-1.0 bar)	0.5 psi (.035 bar)			
STG840	500 psi (35 bar)	-14.7 psi (-1.0 bar)	5 psi (.35 bar)			
STG84L	500 psi (35 bar)	-14.7 psi (-1.0 bar)	5 psi (.35 bar)			
STG870	3000 psi (210 bar)	-14.7 psi (-1.0 bar)	30 psi (2.1 bar)			
STG87L	3000 psi (210 bar)	-14.7 psi (-1.0 bar)	30 psi (2.1 bar)			
STG88L	6000 psi (420 bar)	-14.7 psi (-1.0 bar)	60 psi (4.2 bar)			
STG89L	10000 psi (690 bar)	-14.7 psi (-1.0 bar)	100 psi (6.9 bar)			0.055 / 0.04%

Zero and span may be set anywhere within the listed (URL/LRL) range limits

Accuracy at Specified Span and Temperature: (Conformance to +/-3 Sigma)

			Accuracy[1,2] (% of Span)				Combined Zero & Span Temperature Effect (% Span/50°F)	
	Model	URL	For Turndowns Greater Then	A	B	C psi (bar)	D	E
Standard Accuracy	STG830	50 psi (3.5 bar)	50:1	0.015	0.04	1 (0.7)	0.030	0.003
	STG83L	50 psi (3.5 bar)	16:1			3 (0.47)		0.006
	STG840	500 psi (35 bar)	25:1			20 (1.4)	0.025	0.004
	STG84L	500 psi (35 bar)	25:1			20 (1.4)		0.007
	STG870	3000 psi (210 bar)	10:1			300 (20.7)		0.005
	STG87L	3000 psi (210 bar)	10:1			300 (20.7)		0.010
	STG88L	6000 psi (420 bar)	12:1			500 (34.4)		
	STG89L	10000 psi (690 bar)	10:1			1000 (69)		
High Accuracy Option	*STG830*	*50 psi (3.5 bar)*	50:1	0.015	0.01	1 (0.7)	0.030	0.003
	STG83L	*50 psi (3.5 bar)*	16:1	0.010	0.015	3 (0.47)	0.030	0.006
	STG840	*500 psi (35 bar)*	25:1	0.015	0.01	20 (1.4)	0.025	0.004
	STG84L	*500 psi (35 bar)*	25:1			20 (1.4)		0.007
	STG870	*3000 psi (206.8 bar)*	10:1			300 (20.7)		0.005
	STG87L	*3000 psi (206.8 bar)*	10:1			300 (20.7)		0.001
	STG88L	*6000 psi (413 bar)*	12:1			500 (34.4)		
	STG89L	*10000 psi (690 bar)*	10:1		0.025	1000 (69)		
			Turn Down Effect $\pm\left[A + B\left(\frac{C}{Span}\right)\right]$ % Span				**Temp Effect** $\pm\left[D + E\left(\frac{URL}{Span}\right)\right]$ % Span per 28°C (50°F)	

Total Performance (% of Span):

Total Performance Calculation: $= +/- \sqrt{(\text{Accuracy})^2 + (\text{Temperature Effect})^2}$

Standard Accuracy Total Performance Examples (for comparison): @ 5:1 Turndown, +/-50 °F (28°C) shift

STG830 @ 10 psi	0.071% of span	**STG840 @ 100 psi**	0.071% of span	**STG870 @ 600 psi**	0.074 % of span
STG83L @ 10 psi	0.081% of span	**STG84L @ 100 psi**	0.081% of span	**STG87L @ 600 psi**	0.093% of span
STG88L @ 1200 psi	0.093% of span	**STG89L @ 2000 psi**	0.093% of span		

Typical Calibration Frequency:

Calibration verification is recommended every four (4) years

Notes:

1. Terminal Based Accuracy - Includes combined effects of linearity, hysteresis, and repeatability. Analog output adds 0 .005% of span.
2. For zero based spans and reference conditions of: 25 °C (77oF) for LRV>= 0 psia, 10 to 55% RH, and 316 Stainless Steel barrier diaphragm.

Operating Conditions – All Models

Parameter	Reference Condition		Rated Condition		Operative Limits		Transportation and Storage	
	°C	°F	°C	°F	°C	°F	°C	°F
Ambient Temperature[1]	25±1	77±2	-40 to 85	-40 to 185	-40 to 85	-40 to 185	-55 to 120	-67 to 248
Meter Body Temperature[2]	25±1	77±2	-40 to 110[1]	-40 to 230[1]	-40 to 125	-40 to 257	-55 to 120	-67 to 248
Humidity %RH	10 to 55		0 to 100		0 to 100		0 to 100	
Vac. Region – Min. Pressure **mmHg absolute** **inH_2O absolute**	 Atmospheric Atmospheric		 25 13		 2 (short term) [3] 1 (short term) [3]			
Supply Voltage **Load Resistance**	10.8 to 42.4 Vdc at terminals 0 to 1,440 ohms (as shown in Figure 2)							
Maximum Allowable Working Pressure (MAWP)[4, 5] (Maximum allowable working pressure is the maximum pressure allowed for the normal transmitter operation. MAWP depends on Approval agencies and transmitter material of construction. MAWP are same as URL for gauge and absolute pressure transmitters)	STG830: 50 psi (3.5 bar) STG840: 500 psi (35 bar) STG870: 3000 psi (210 bar)				STG83L: 50 psi (3.5 bar) STG84L: 500 psi (35 bar) STG87L: 3000 psi (210 bar) STG88L: 6000 psi (420 bar) STG89L: 10000 psi (690 bar)			
Over pressure These are the pressure limits the transmitters can withstand without damage	STG830: 75 psi (5.25 bar) STG83L: 75 psi (5.25 bar) STG840: 1500 psi (103 bar) STG84L: 1500 psi (103 bar) STG870: 4500 psi (310 bar) STG87L: 4500 psi (310 bar) STG88L: 9000 psi (620 bar) STG89L: 15000 psi (1035 bar)							

[1] LCD Display operating temperature -20°C to +70°C . Storage temperature -30°C to 80°C.

[2] Silicone 704 minimum temperature rating is 0ºC (32ºF). NEOBEE M-20 minimum temperature rating is -15ºC (5ºF)

NEOBEE® is a registered trademark of Stepan Company

[3]. Short term equals 2 hours at 70°C (158°F)

[4]. Units can withstand overpressure of 1.5 x MAWP without damage

[5] Consult factory for MAWP of ST 800 transmitters with CRN approval

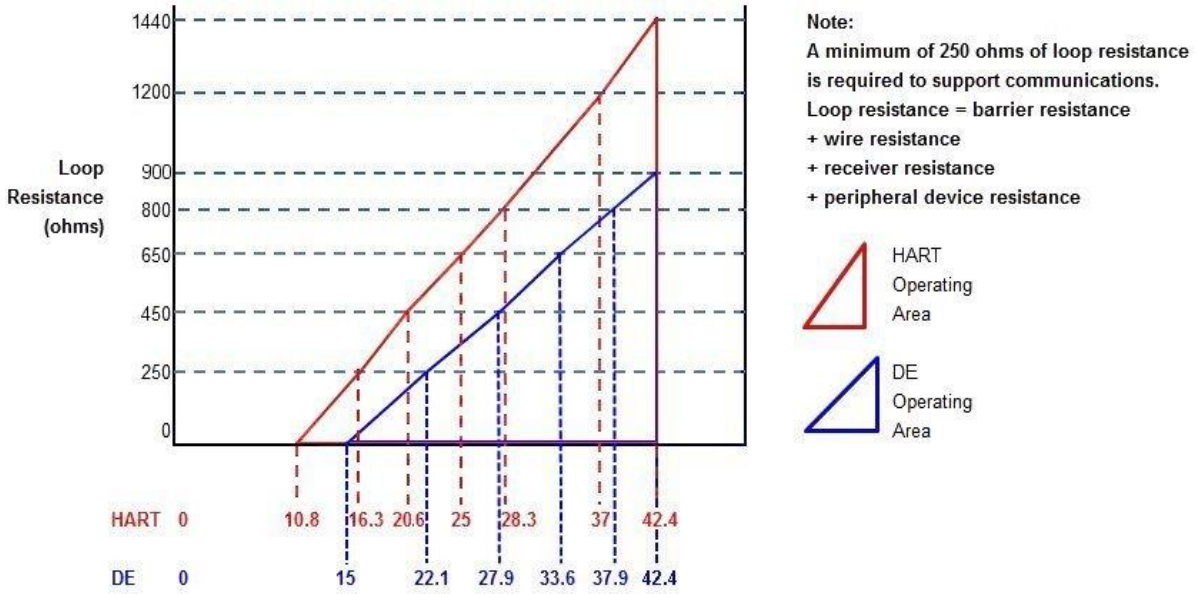

For DE, Rlmax = 35* (Power Supply Voltage-15)
For HART, Rlmax = 45.6* (Power Supply Voltage-10.8)

Figure 2 - Supply voltage and loop resistance chart & calculations

Performance Under Rated Conditions – All Models

Parameter	Description
Analog Output **Digital Communications**:	Two-wire, 4 to 20 mA (HART & DE Transmitters only) Honeywell DE, HART 7 protocol or FOUNDATION Fieldbus ITK 6.0.1 compliant All transmitters, irrespective of protocol have polarity insensitive connection.
HART & DE Output Failure Modes (NAMUR for DE Units requires selecting display and configuration buttons or factory configuration)	**Honeywell Standard:** / **NAMUR NE 43 Compliance**: **Normal Limits:** 3.8 – 20.8 mA / 3.8 – 20.5 mA **Failure Mode:** ≤ 3.6 mA and ≥ 21.0 mA / ≤ 3.6 mA and ≥ 21.0 mA
Supply Voltage Effect	0.005% span per volt.
Transmitter Turn on Time **(includes power up & test algorithms)**	HART or DE: 2.5 sec Foundation Fieldbus: Host dependent
Response Time (delay + time constant)	**DE/HART Protocol**: 80ms **FOUNDATION Fieldbus**: 150ms (Host Dependent)
Damping Time Constant	**HART:** Adjustable from 0 to 32 seconds in 0.1 increments. **Default Value:** 0.5 seconds **DE:** Discrete values 0, 0.16, 0.32, 0.48, 1, 2, 4, 8, 16, 32 seconds. **Default Value:** 0.48 seconds
Vibration Effect:	Less than +/- 0.1% of URL w/o damping Per IEC60770-1 field or pipeline, high vibration level (10-2000Hz: 0.21 displacement/3g max acceleration)
Electromagnetic Compatibility	Complies with EMC directive 2004/108/EC per IEC 61326-3-1 (HART/ DE Units) IEC 61326-1 (FF Units)
Lightning Protection Option	**Leakage Current:** 10uA max @ 42.4VDC 93C **Impulse rating:** 8/20uS 5000A (>10 strikes) 10000A (1 strike min.) 10/1000uS 200A (> 300 strikes)

Materials Specifications (see model selection guide for availability/restrictions with various models)

Parameter	Description
Barrier Diaphragms Material	**STG800**: 316L SS, Hastelloy® C-276[2], Monel® 400 [3], Tantalum, Gold-plated 316L SS, Gold-plated Hastelloy® C-276, Gold-plated Monel® 400 **STG80L**: 316L SS, Hastelloy C-276
Process Head Material	**STG800**: Carbon Steel (Zinc Plated), 316 SS[4], Hastelloy® C-276[6], Monel® 400 [7] **STG80L:** 316L SS, Hastelloy C-276[6]
Vent/Drain Valves & Plugs [1]	**STG800:**316 SS[4], Hastelloy C-276[2], Monel 400 [7] **STG80L:** N/A
Head Gaskets	**STG800:** Glass-filled PTFE standard. Viton® and graphite are optional. **STG80L:** N/A
Meter Body Bolting	**STG800:** Carbon Steel (Zinc plated) standard. Options include 316 SS, NACE A286 SS bolts and nuts or NACE A286 SS bolts and 304 SS nuts **STG80L:** N/A
Mounting Bracket	Carbon Steel (Zinc-plated) or 304 Stainless Steel or 316SS angle bracket or Carbon Steel or 304SS or 316SS flat bracket available .with 2" pipe bracket. See Figure 3
Fill Fluid	Silicone 200, CTFE, NEOBEE M-20 or Silicone 704
Electronic Housing	Pure Polyester Powder Coated Low Copper (<0.4%)-Aluminum. Meets NEMA 4X, IP66, IP67 and NEMA 7 (explosion proof). All stainless steel housing is optional.
Process Connections	**STG800:** ½ -inch NPT(female), DIN 19213 (standard) **STG80L:** ½ -inch NPT(female), ½ -inch NPT male, 9/16 Aminco, DIN19213 (except STG89L), G ½ -B Male threaded
Wiring	Accepts up to 16 AWG (1.5 mm diameter).
Dimensions	See Figure 4.
Net Weight	**STG800:** 8.3 pounds (3.8 Kg). **STG80L:** 3.6 pounds (1.6 Kg) with Aluminum Housing

[1] Vent/Drains are sealed with Teflon®
[2] Hastelloy® C-276 or UNS N10276
[3] Monel® 400 or UNS N04400
[4] Supplied as 316 SS or as Grade CF8M, the casting equivalent of 316 SS.
[5] Carbon Steel heads are zinc-plated and not recommended for water service due to hydrogen migration. For that service, use 316 stainless steel wetted Process Heads.
[6] Hastelloy® C-276 or UNS N10276. Supplied as indicated or as Grade CW12MW, the casting equivalent of Hastelloy® C-276
[7] Monel® 400 or UNS N04400. Supplied as indicated or as Grade M30C, the casting equivalent of Monel® 400

Communications Protocol & Diagnostics

HART Protocol

Version:

HART 7

Power Supply

Voltage: 10.8 to 42.4Vdc at terminals

Load: Maximum 1440 ohms See figure 2

Minimum Load: 0 ohms. (For handheld communications a minimum load of 250 ohms is required)

Foundation Fieldbus (FF)

Power Supply Requirements

Voltage: 9.0 to 32.0Vdc at terminals

Steady State Current: 17.6mAdc

Software Download Current: 27.4mAdc

Available Function Blocks

Block Type	Quantity	Execution Time
Resource	1	n/a
Transducer	1	n/a
Diagnostic	1	n/a
Analog Input	1*	30 ms
PID w/Autotune	1	45 ms
Integrator	1	30 ms
Signal Char (SC)	1	30 ms
LCD Display	1	n/a
Flow Block	1	30 ms
Input Selector	1	30 ms
Arithmetic	1	30 ms

* AI block may have two (2) additional instantiations.

All available function blocks adhere to FOUNDATION Fieldbus standards. PID blocks support ideal & robust PID algorithms with full implementation of Auto-tuning.

Link Active Scheduler

Transmitters can perform as a backup Link Active Scheduler and take over when the host is disconnected. Acting as a LAS, the device ensures scheduled data transfers typically used for the regular, cyclic transfer of control loop data between devices on the Fieldbus.

Number of Devices/Segment

Entity IS model: 6 devices/segment

Schedule Entries

18 maximum schedule entries

Number of VCR's: 24 max

Compliance Testing:

- Tested according to ITK 6.0.1

Software Download

Utilizes Class-3 of the Common Software Download procedure as per FF-883 which allows the field devices of any manufacturer to receive software upgrades from any host.

Honeywell Digitally Enhanced (DE)

DE is a Honeywell proprietary protocol which provides digital communications between Honeywell DE enabled field devices and Hosts.

Power Supply

Voltage: 10.8 to 42.4Vdc at terminals

Load: Maximum 1440 ohms See figure 2

Standard Diagnostics

ST 800 top level diagnostics are reported as either critical or non-critical and readable via the DD/DTM tools or integral display as shown

Critical Diagnostics		
HART DD/DTM tools	**Advanced Display**	**Basic Display**
Electronic Module DAC Failure	Electronics Module fault	Electronics Module fault
Meter Body NVM Corrupt	Meterbody fault	Meterbody fault
Config Data Corrupt	Electronics Module fault	Electronics Module fault
Electronic Module Diag Failure	Electronics Module fault	Electronics Module fault
Meter Body Critical Failure	Meterbody fault	Meterbody fault
Sensor Comm Timeout	Meterbody Comm fault	Meterbody Comm fault

Non-Critical Diagnostics		
HART DD/DTM tools	**Advanced Display**	**Basic Display**
Display Failure	n/a	n/a
Electronic Module Comm Failure	n/a	n/a
Meter Body Excess Correct	Zero Correct (OK or EXCESSIVE) Span Correct (OK or EXCESSIVE)	n/a
Sensor Over Temperature	Meterbody Temp (OK, OVER TEMP)	n/a
Fixed Current Mode	Analog Out mode (Fixed or Normal)	n/a
PV Out of Range	Primary PV (OK or OVERLOAD)	n/a
No Factory Calibration	Factory Cal (OK, NO FACTORY CAL)	n/a
No DAC Compensation	DAC Temp Comp (OK, NO COMPENSATION)	n/a
LRV Set Error – Zero Config Button	n/a	n/a
URV Set Error – Span Config Button	n/a	n/a
AO Out of Range	n/a	n/a
Loop Current Noise	n/a	n/a
Meter Body Unreliable Comm	Meterbody Comm (OK, SUSPECT)	n/a
Tamper Alarm	n/a	n/a
No DAC Calibration	n/a	n/a
Sensor Supply Voltage Low	Supply Voltage (OK, LOW, or HIGH)	n/a

Other Certification Options

Materials

- NACE MRO175, MRO103, ISO15156

Approval Certifications:

AGENCY	TYPE OF PROTECTION	COMM. OPTION	FIELD PARAMETERS	AMBIENT TEMP (Ta)
FM Approvals™	**Explosionproof:** Class I, Division 1, Groups A, B, C, D; **Dust Ignition Proof:** Class II, III, Division 1, Groups E, F, G; Class l, Zone 0/1, AEx d IIC Ga/Gb Class ll, Zone 21, AEx tb IIIC Db T 95°C	All	Note 1	T5: -50 °C to 85°C T6: -50 °C to 65°C
	Intrinsically Safe: Class I, II, III, Division 1, Groups A, B, C, D, E, F, G: T4 Class l, Zone 0, AEx ia IIC Ga T4 FISCO Field Device (Only for FF Option) Ex ia IIC T4	4-20 mA / DE/ HART	Note 2a	-50 °C to 70°C
		Foundation Fieldbus	Note 2b	-50 °C to 70°C
	Nonincendive: Class I, Division 2, Groups A, B, C, D locations, Class l, Zone 2, AEx nA IIC Gc T4	4-20 mA / DE/ HART/ Foundation Fieldbus	Note 1	-50 °C to 85°C
	Enclosure: Type 4X/ IP66/ IP67	All	All	-
Canadian Standards Association (CSA)	**Explosion Proof:** Class I, Division 1, Groups A, B, C, D; **Dust Ignition Proof:** Class II, III, Division 1, Groups E, F, G; Ex d IIC Ga Ex tb IIIC Db T 95°C	All	Note 1	T5: -50 °C to 85°C T6: -50 °C to 65°C
	Intrinsically Safe: Class I, II, III, Division 1, Groups A, B, C, D, E, F, G; T4 Ex ia IIC Ga T4 FISCO Field Device (Only for FF Option) Ex ia IIC T4	4-20 mA / DE/ HART	Note 2a	-50 °C to 70°C
		Foundation Fieldbus	Note 2b	-50 °C to 70°C
	Nonincendive: Class I, Division 2, Groups A, B, C, D; T4 Ex nA IIC Gc T4	4-20 mA / DE/ HART/ Foundation Fieldbus	Note 1	-50 °C to 85°C
	Enclosure: Type 4X/ IP66/ IP67	All	All	-

Approval Certifications: (Continued)

ATEX	**Flameproof:** II 1/2 G Ex d IIC Ga/Gb II 2 D Ex tb IIIC Db T 95°C	All	Note 1	T5: -50 °C to 85°C T6: -50 °C to 65°C
	Intrinsically Safe: II 1 G Ex ia IIC Ga T4	4-20 mA / DE/ HART	Note 2a	-50 °C to 70°C
	FISCO Field Device (Only for FF Option) Ex ia IIC T4	Foundation Fieldbus	Note 2b	-50 °C to 70°C
	Nonincendive: II 3 G Ex nA IIC Gc T4	4-20 mA / DE/ HART/ Foundation Fieldbus	Note 1	-50 °C to 85°C
	Enclosure: IP66/ IP67	All	All	-
IECEx (World)	**Flameproof :** Ex d IIC Ga/Gb Ex tb IIIC Db T 95°C	All	Note 1	T5: -50 °C to 85°C T6: -50 °C to 65°C
	Intrinsically Safe: Ex ia IIC Ga T4	4-20 mA / DE/ HART	Note 2a	-50 °C to 70°C
	FISCO Field Device (Only for FF Option) Ex ia IIC T4	Foundation Fieldbus	Note 2b	-50 °C to 70°C
	Nonincendive: Ex nA IIC Gc T4	4-20 mA / DE/ HART/ Foundation Fieldbus	Note 1	-50 °C to 85°C
	Enclosure: IP66/ IP67	All	All	-
SAEx (South Africa)	**Flameproof :** Ex d IIC Ga/Gb T4 Ex tb IIIC Db T 95°C	All	Note 1	-50 °C to 85°C
	Intrinsically Safe: Ex ia IIC Ga T4	4-20 mA / DE/ HART	Note 2a	-50 °C to 70°C
	FISCO Field Device (Only for FF Option) Ex ia IIC T4	Foundation Fieldbus	Note 2b	-50 °C to 70°C
	Nonincendive: Ex nA IIC Gc T4	4-20 mA / DE/ HART/ Foundation Fieldbus	Note 1	-50 °C to 85°C
	Enclosure: IP66/ IP67	All	All	-
INMETRO (Brazil)	**Flameproof:** Ex d IIC Ga/ Gb T4 Ex tb IIIC Db T 95°C	All	Note 1	-50 °C to 85°C
	Intrinsically Safe: Ex ia IIC Ga T4	4-20 mA / DE/ HART	Note 2a	–50 °C to 70°C
	FISCO Field Device (Only for FF Option) Ex ia IIC T4	Foundation Fieldbus	Note 2b	–50 °C to 70°C
	Nonincendive: Ex nA IIC Gc T4	4-20 mA / DE/ HART/ Foundation Fieldbus	Note 1	-50 °C to 85°C
	Enclosure : IP 66/67	All	All	-

Approval Certifications: (Continued)

NEPSI (China)	**Flameproof:** Ex d IIC Ga/Gb T4 Ex tb IIIC Db T 85°C	All	Note 1	-50 °C to 85°C
	Intrinsically Safe: Ex ia IIC Ga T4	4-20 mA / DE/ HART	Note 2a	-50 °C to 70°C
	FISCO Field Device (Only for FF Option) Ex ia IIC T4	Foundation Fieldbus	Note 2b	-50 °C to 70°C
	Nonincendive: Ex nA IIC Gc T4	4-20 mA / DE/ HART/ Foundation Fieldbus	Note 1	-50 °C to 85°C
	Enclosure : IP 66/67	All	All	-
GOST	**Flameproof:** 1 Ex d IIC Ga/Gb T4 Ex tb IIIC Db T 85°C	All	Note 1	-50 °C to 85°C
	Intrinsically Safe: 0 Ex ia IIC Ga T4	4-20 mA / DE/ HART	Note 2a	-50 °C to 70°C
	FISCO Field Device (Only for FF Option) Ex ia IIC T4	Foundation Fieldbus	Note 2b	-50 °C to 70°C
	Enclosure : IP 66/67	All	All	

Notes:

1. Operating Parameters:

   Voltage= 11 to 42 V DC Current= 4-20 mA Normal
   = 10 to 30 V (FF) = 30 mA (FF)

2. Intrinsically Safe Entity Parameters

   a. Analog/ DE/ HART Entity Values:

   Vmax= Ui = 30V Imax= Ii= 105mA Ci = 4.2nF Li =984 uH Pi =0.9W

   Transmitter with Terminal Block Revision E or Later

   Vmax= Ui = 30V Imax= Ii= 225mA Ci = 4.2nF Li = 0 Pi =0.9W

   Note : Transmitter with Terminal Block Revision E or later

   The revision is on the label that is on the module. There will be two lines of text on the label:

   - First is the Module Part #: 50049839-001 or 50049839-002
   - Second line has the supplier information, along with the REVISION:

   XXXXXXX-EXXXX, THE "X" is production related, THE POSITION of the "E" IS THE REVISION.

   b. Foundation Fieldbus- Entity Values

   Vmax= Ui = 30V Imax= Ii= 180mA Ci = 0nF Li = 984 uH Pi =1W

   Transmitter with Terminal Block Revision F or Later)

   Vmax= Ui = 30V Imax= Ii= 225mA Ci =0nF Li = 0 Pi =1 W

   FISCO Field Device Imax= Ii= 380 mA Ci = 0nF Li = 0 Pi =5.32 W

   Vmax= Ui = 17.5V

   Note : Transmitter with Terminal Block Revision F or later

   The revision is on the label that is on the module. There will be two lines of text on the label:

   - First is the Module Part #: 50049839-003 or 50049839-004
   - Second line has the supplier information, along with the REVISION:

   XXXXXXX-EXXXX, THE "X" is production related, THE POSITION of the "E" IS THE REVISION.

Approval Certifications: (Continued)

<table>
<tr><td rowspan="6">Marine Certificates</td><td>This certificate defines the certifications covered for the ST 800 Pressure Transmitter family of products, including the SMV 800 Smart Multivariable Transmitter. It represents the compilation of the five certificates Honeywell currently has covering the certification of these products into marine applications.

For ST 800 Smart Pressure Transmitter and SMV800 Smart Multivarible Transmitter</td></tr>
<tr><td>American Bureau of Shipping (ABS) - 2009 Steel Vessel Rules 1-1-4/3.7, 4-6-2/5.15, 4-8-3/13 & 13.5, 4-8-4/27.5.1, 4-9-7/13. Certificate number: 04-HS417416-PDA</td></tr>
<tr><td>Bureau Veritas (BV) - Product Code: 389:1H. Certificate number: 12660/B0 BV</td></tr>
<tr><td>Det Norske Veritas (DNV) - Location Classes: Temperature D, Humidity B, Vibration A, EMC B, Enclosure C. For salt spray exposure; enclosure of 316 SST or 2-part epoxy protection with 316 SST bolts to be applied. Certificate number: A-11476</td></tr>
<tr><td>Korean Register of Shipping (KR) - Certificate number: LOX17743-AE001</td></tr>
<tr><td>Lloyd's Register (LR) - Certificate number: 02/60001(E1) & (E2)</td></tr>
<tr><td>SIL 2/3 Certification</td><td>IEC 61508 SIL 2 for non-redundant use and SIL 3 for redundant use according to EXIDA and TÜV Nord Sys Tec GmbH & Co. KG under the following standards: IEC61508-1: 2010; IEC 61508-2: 2010; IEC61508-3: 2010.</td></tr>
<tr><td>MEASUREMENT INTRUMENTS DIRECTIVE (MID) 2004/ 22/ EC</td><td>Certificate Issued by NMI Certin B.V.
Mechanical Class: M3 Electromagnetic Environment: E3
Ambient Temperature Range: -25 ºC to + 55 ºC

<table>
<tr><th>Unit</th><th>Custom Calibration</th></tr>
<tr><td>STD820</td><td>0 to 1000 mBar</td></tr>
<tr><td>STD830</td><td>0 to 7 Bar</td></tr>
<tr><td>STA84L</td><td>0 to 35 Bar A</td></tr>
<tr><td>STG84L</td><td>0 to 35 Bar</td></tr>
<tr><td>STD870</td><td>0 to 100 Bar</td></tr>
<tr><td>STA87L</td><td>0 to 100 Bar A</td></tr>
<tr><td>STG87L</td><td>0 to 100 Bar</td></tr>
</table></td></tr>
</table>

Mounting & Dimensional Drawings)

Reference Dimensions: $\frac{\text{millimeters}}{\text{inches}}$

Mounting Configurations: (Dual head design)

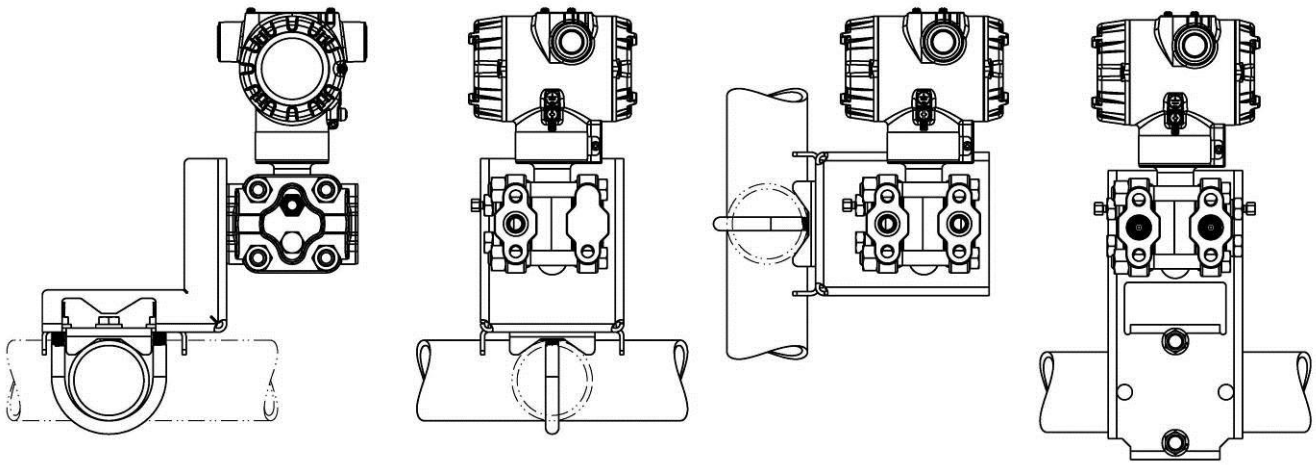

Mounting Configurations (Inline Designs)

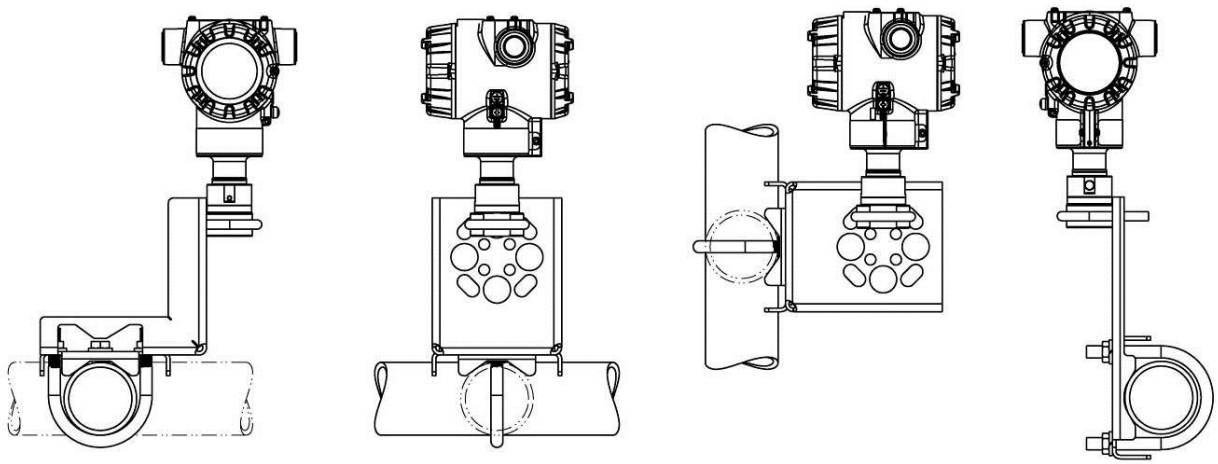

Reference Dimensions: $\frac{\text{millimeters}}{\text{inches}}$

Dimensions: (Dual head design)

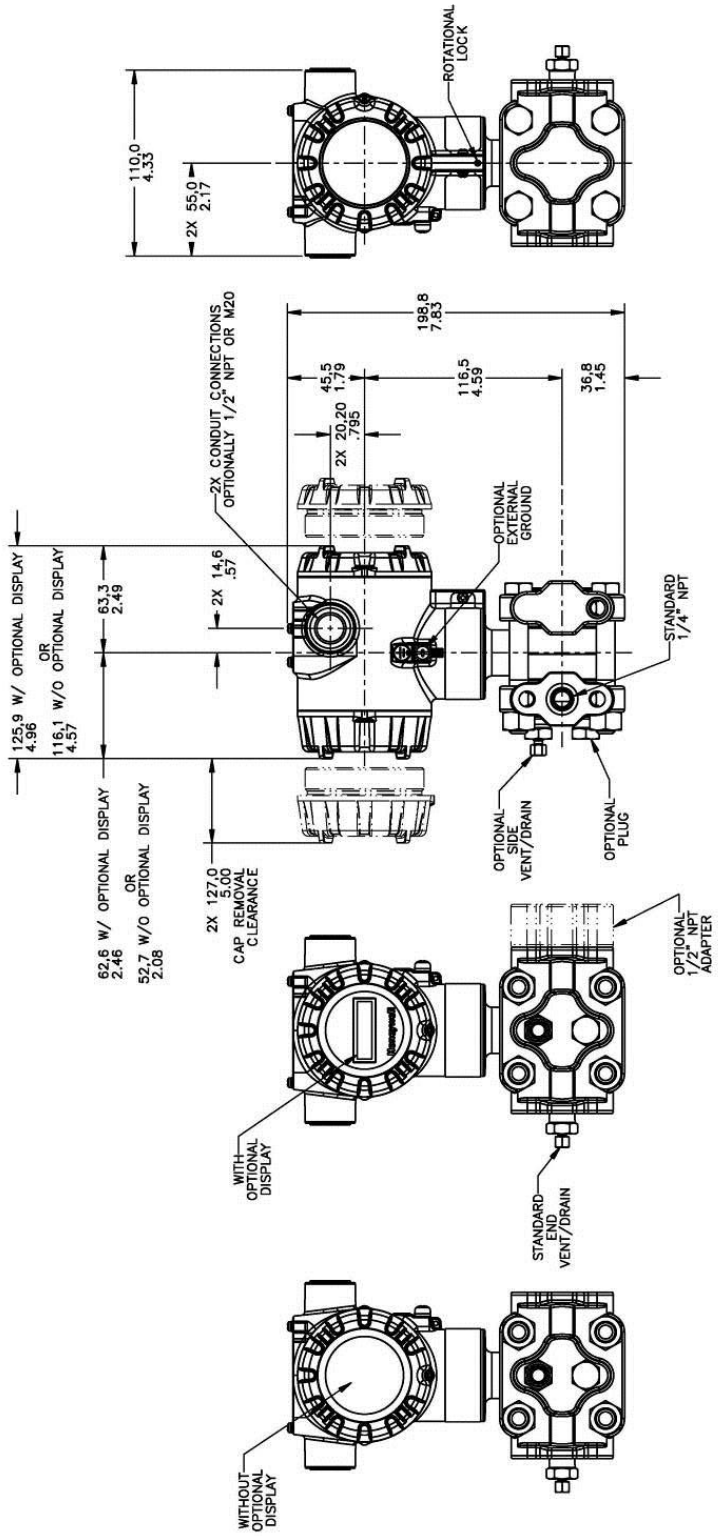

Figure 4 – Typical mounting dimensions of STG840 & STG870 for reference

Reference Dimensions: $\frac{\text{millimeters}}{\text{inches}}$

Dimension (Inline Design)

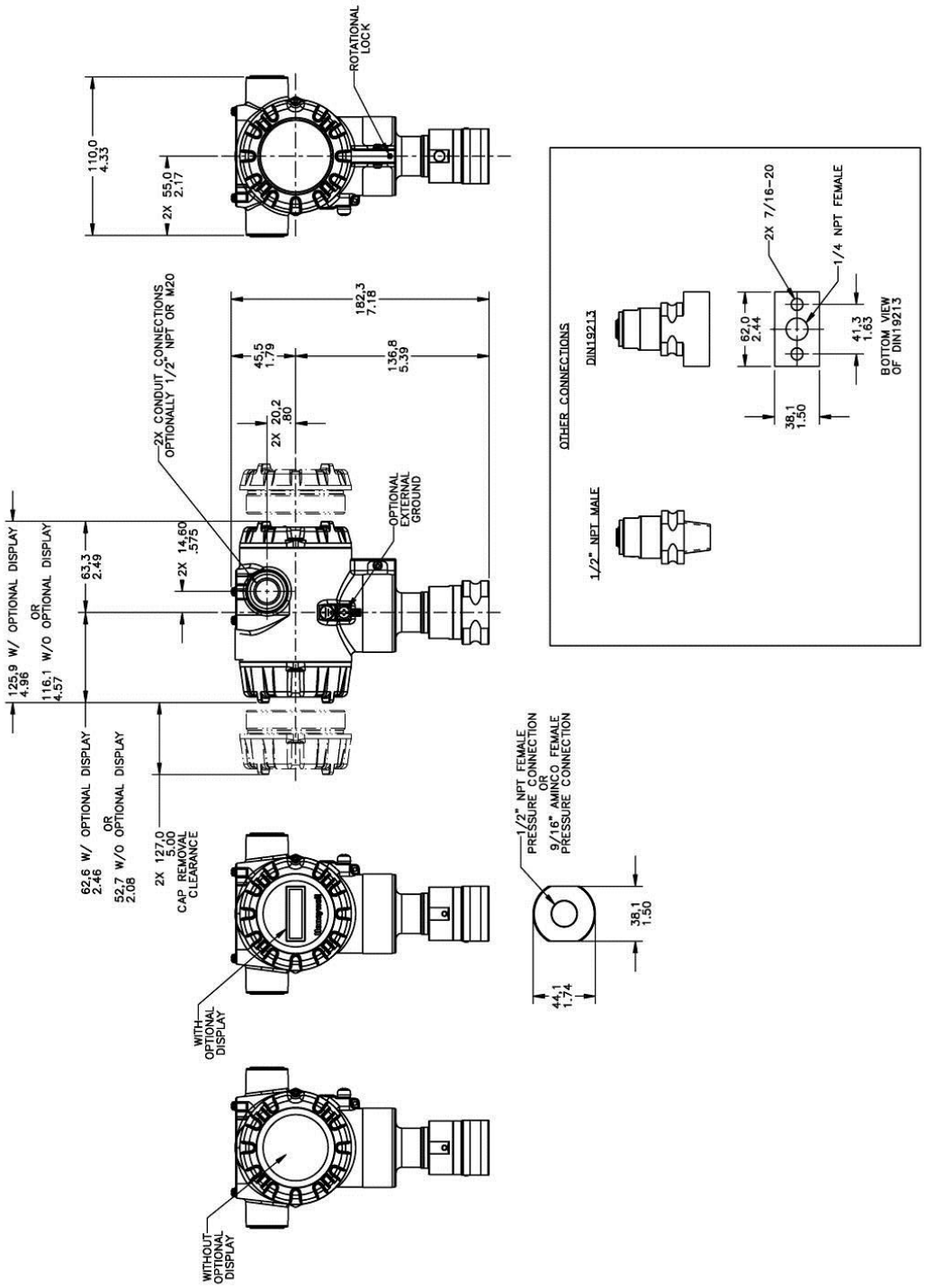

Figure 5 – Typical mounting dimensions of STG84L, STG87L, STG88L, & STG89L for reference

Model Selection Guides are subject to change and are inserted into the specifications as guidance only.
Prior to specifying or ordering a model check for the latest revision Model Selection Guides which are published at:
www.honeywellprocess.com/en-US/pages/default.aspx

Model Selection Guide

Model STG800
Gauge Pressure Transmitters

Model Selection Guide
34-ST-16-83 Issue 16

Instructions: Make selections from all Tables using column below the proper arrow. Asterisk indicates availability. Letter (a) refers to restrictions highlighted in the restrictions table. Tables delimited with dashes.

Key	I	II	III	IV	V	VI	VII	VIII	IX
STG _ _ _	_ _ _ _ _ _	_	_	_ _ _	_ _ _	_	_ _ _ _	_ _ _ _ _ _ _ _	0 0 0 0

KEY NUMBER	URL/Max Span	LRL	Min Span	Units
Gauge Dual Head	50 (3.5)	-14.7 (-1.0)	0.5 (.035)	psi (bar)
	500 (35)	-14.7 (-1.0)	5 (.35)	psi (bar)
	3000 (210)	-14.7 (-1.0)	30 (2.1)	psi (bar)
Gauge In-Line	50 (3.5)	-14.7 (-1.0)	0.5 (.035)	psi (bar)
	500 (35)	-14.7 (-1.0)	5 (.35)	psi (bar)
	3000 (210)	-14.7 (-1.0)	30(2.1)	psi (bar)
	6000 (420)	-14.7 (-1.0)	60 (4.2)	psi (bar)
	10000 (690)	-14.7 (-1.0)	100 (6.9)	psi (bar)

Selection	Availability						
STG830	↓						
STG840	↓						
STG870		↓					
STG83L			↓				
STG84L				↓			
STG87L					↓		
STG88L						↓	
STG89L							↓

TABLE I	METER BODY SELECTIONS							
	Process Head/Reference Head Material[1b]	Barrier Diaphragm Material						
a. Process Head & Diaphragm Materials	Plated Carbon Steel / Plated Carbon Steel	316L SS	A _ _ _ _ _	*	*					
		Hastelloy® C - 276	B _ _ _ _ _	*	*					
		Monel 400®	C _ _ _ _ _	*	*					
		Tantalum	D _ _ _ _ _	a	a					
		Gold Plated 316L SS	1 _ _ _ _ _	*	*					
		Gold Plated Hastelloy C-276	2 _ _ _ _ _	*	*					
		Gold Plated Monel 400	3 _ _ _ _ _	*	*					
	316 Stainless Steel / 316 Stainless Steel	316L SS	E _ _ _ _ _	*	*	*	*	*	*	*
		Hastelloy C - 276	F _ _ _ _ _	*	*	*	*	*	*	*
		Monel 400	G _ _ _ _ _	*	*					
		Tantalum	H _ _ _ _ _	a	a					
		Gold Plated 316L SS	4 _ _ _ _ _	*	*					
		Gold Plated Hastelloy C-276	5 _ _ _ _ _	*	*					
		Gold Plated Monel 400	6 _ _ _ _ _	*	*					
	Hastelloy C - 276 / 316 Stainless Steel	Hastelloy C - 276	J _ _ _ _ _	*	*	*	*	*	*	*
		Tantalum	K _ _ _ _ _	a	a					
		Gold Plated Hastelloy C-276	7 _ _ _ _ _	*	*					
	Monel 400 / 316 Stainless Steel	Monel 400	L _ _ _ _ _	a	a					
		Gold Plated Monel 400	8 _ _ _ _ _	a	a					
b. Fill Fluid	Silicone Oil 200		_ 1 _ _ _ _	*	*	*	*	*	*	*
	Fluorinated Oil CTFE		_ 2 _ _ _ _	*	*	*	*	*	*	*
	Silicone Oil 704		_ 3 _ _ _ _	*	*	*	*	*	*	*
	NEOBEE® M-20		_ 4 _ _ _ _	*	*	*	*	*	*	*
	Size/Type	Material								
c. Process Connection	9/16" Aminco	Same as Process Head	_ _ A _ _ _			*	*	*	*	*
	1/2" NPT (female)	Same as Process Head [1a]	_ _ G _ _ _	*	*	*	*	*	*	*
	1/2" NPT (male)	Same as Process Head	_ _ H _ _ _			*	*	*	*	*
	DIN 19213 (1/4" female NPT)	Same as Process Head	_ _ D _ _ _	*	*	*	*	*	*	
	G 1/2 B Threaded Fitting	Same as Process Head	_ _ B _ _ _			*	*	*	*	*
d. Bolt/Nuts Materials	None		_ _ _ 0 _ _			*	*	*	*	*
	Carbon Steel		_ _ _ C _ _	*	*					
	316 SS		_ _ _ S _ _	*	*					
	Grade 660 (NACE A286) with NACE 304 SS Nuts		_ _ _ N _ _	*	*					
	Grade 660 (NACE A286) Bolts & Nuts		_ _ _ K _ _	p	p					
	Monel K500		_ _ _ M _ _	p	p					
	Super Duplex		_ _ _ D _ _	p	p					
	B7M		_ _ _ B _ _	*	*					
	Head Type	Vent Type / Location	Vent Material							
e. Vent/Drain Type/Location	None	None / None	None	_ _ _ _ 0 _			*	*	*	*	*
	Single Ended	None / None	None	_ _ _ _ 1 _	*	*					
	Single Ended	Standard Vent / Side	Matches Head Material[1]	_ _ _ _ 2 _	*	*					
	Single Ended	Center Vent / Side	Stainless Steel Only	_ _ _ _ 3 _	t	t					
	Dual Ended	Standard Vent / End	Matches Head Material[1]	_ _ _ _ 4 _	*	*					
	Dual Ended	Center Vent / End	Stainless Steel only	_ _ _ _ 5 _	t	t					
	Dual Ended	Std Vent/Plug / Side/End	Matches Head Material[1]	_ _ _ _ 6 _	*	*					
f. Gasket Materials	None			_ _ _ _ _ 0			*	*	*	*	*
	Teflon® or PTFE (Glass Filled)			_ _ _ _ _ A	*	*					
	Viton®			_ _ _ _ _ B	*	*					
	Graphite			_ _ _ _ _ C	*	*					

[1] Except Carbon Steel Heads shall use 316SS Vent/Drain & Plugs and or 1/2" adapters

[1a] STG830,840,870 supplied via 1/2" flange adapter same material as process head except carbon steel shall use 316 SS

[1b] Reference head available with Dual Head Gage models only. In-Line Gage models are supplied with Process Head only.

	STG89L	STG88L	STG87L	STG84L	STG83L	STG870	STG830, STG840

TABLE II	METER BODY & CONNECTION ORIENTATION								
Head/Connect Orientation	Standard	High Side Left, Low Side Right[2] / Std Head Orientation	1	*	*	*	*	*	*	*
	Reversed	Low Side Left, High Side Right[2] / Std Head Orientation	2	*	*					
	90/Standard	High Side Left, Low Side Right[2] / 90^0 Head Rotation	3	h	h					

TABLE III	AGENCY APPROVALS								
Approvals	No Approvals Required	0	*	*	*	*	*	*	*
	<FM> Explosion proof, Intrinsically Safe, Non-incendive, & Dustproof	A	*	*	*	*	*	*	*
	CSA Explosion proof, Intrinsically Safe, Non-incendive, & Dustproof	B	*	*	*	*	*	*	p
	ATEX Explosion proof, Intrinsically Safe & Non-incendive	C	*	*	*	*	*	*	*
	IECEx Explosion proof, Intrinsically Safe & Non-incendive	D	*	*	*	*	*	*	*
	SAEx/CCoE Explosion proof, Intrinsically Safe & Non-incendive	E	*	*	*	*	*	*	*
	INMETRO Explosion proof, Intrinsically Safe & Non-incendive	F	*	*	*	*	*	*	*
	NEPSI Explosion proof, Intrinsically Safe & Non-incendive	G	*	*	*	*	*	*	*

TABLE IV	TRANSMITTER ELECTRONICS SELECTIONS								
	Material	Connection	Lightning Protection							
a. Electronic Housing Material & Connection Type	Polyester Powder Coated Aluminum	1/2 NPT	None	A _ _	*	*	*	*	*	*	*
	Polyester Powder Coated Aluminum	M20	None	B _ _	*	*	*	*	*	*	*
	Polyester Powder Coated Aluminum	1/2 NPT	Yes	C _ _	*	*	*	*	*	*	*
	Polyester Powder Coated Aluminum	M20	Yes	D _ _	*	*	*	*	*	*	*
	316 Stainless Steel (Grade CF8M)	1/2 NPT	None	E _ _	*	*	*	*	*	*	*
	316 Stainless Steel (Grade CF8M)	M20	None	F _ _	*	*	*	*	*	*	*
	316 Stainless Steel (Grade CF8M)	1/2 NPT	Yes	G _ _	*	*	*	*	*	*	*
	316 Stainless Steel (Grade CF8M)	M20	Yes	H _ _	*	*	*	*	*	*	*
	Analog Output	Digital Protocol								
b. Output/ Protocol	4-20mA dc	HART Protocol		_ H _	*	*	*	*	*	*	*
	4-20mA dc	DE Protocol		_ D _	u	u	u	u	u	u	u
	none	Foundation Fieldbus		_ F _	*	*	*	*	*	*	*
	Indicator	Ext Zero, Span & Config Buttons	Languages								
c. Customer Interface Selections	None	None	None	_ _ 0	*	*	*	*	*	*	*
	None	Yes (Zero/Span Only)	None	_ _ A	f	f	f	f	f	f	f
	Basic	None	EN	_ _ B	*	*	*	*	*	*	*
	Basic	Yes	EN	_ _ C	*	*	*	*	*	*	*
	Advanced	None	EN, GR, FR, IT, SP, RU, TU	_ _ D	*	*	*	*	*	*	*
	Advanced	Yes	EN, GR, FR, IT, SP, RU, TU	_ _ E	*	*	*	*	*	*	*
	Advanced	None	EN, CH, JP	_ _ H	*	*	*	*	*	*	*
	Advanced	Yes	EN, CH, JP	_ _ J	*	*	*	*	*	*	*

TABLE V	CONFIGURATION SELECTIONS								
a. Application Software	Diagnostics								
	Standard Diagnostics			1 _ _	*	*	*	*	*	*	*
	Write Protect	Fail Mode	High & Low Output Limits[3]								
b. Output Limit, Failsafe & Write Protect Settings	Disabled	High> 21.0mAdc	Honeywell Std (3.8 - 20.8 mAdc)	_ 1 _	f	f	f	f	f	f	f
	Disabled	Low< 3.6mAdc	Honeywell Std (3.8 - 20.8 mAdc)	_ 2 _	f	f	f	f	f	f	f
	Enabled	High> 21.0mAdc	Honeywell Std (3.8 - 20.8 mAdc)	_ 3 _	f	f	f	f	f	f	f
	Enabled	Low< 3.6mAdc	Honeywell Std (3.8 - 20.8 mAdc)	_ 4 _	f	f	f	f	f	f	f
	Enabled	N/A	N/A Fieldbus or Profibus	_ 5 _	g	g	g	g	g	g	g
	Disabled	N/A	N/A Fieldbus or Profibus	_ 6 _	g	g	g	g	g	g	g
c. General Configuration	General Configuration								
	Factory Standard			_ _ S	*	*	*	*	*	*	*
	Custom Configuration (Unit Data Required from customer)			_ _ C	*	*	*	*	*	*	*

[2] Left side/Right side as viewed from the customer connection perspective

[3] NAMUR Output Limits are configurable by customer

TABLE VI	CALIBRATION & ACCURACY SELECTIONS			STG830, STG840	STG870	STG83L	STG84L	STG87L	STG88L	STG89L
	Accuracy	Calibrated Range	Calibration Qty							
a. Accuracy and Calibration	Standard	Factory Standard	Single Calibration	A	*	*	*	*	*	*
	Standard	Custom (Unit Data Required)	Single Calibration	B	*	*	*	*	*	*
	Standard	Custom (Unit Data Required)	Dual Calibration	C	*	*	*	*	*	*
	Standard	Custom (Unit Data Required)	Triple Calibration	D	*	*	*	*	*	*
	High Accuracy	Factory Standard	Single Calibration	E	s	s	s	s	s	s
	High Accuracy	Custom (Unit Data Required)	Single Calibration	F	s	s	s	s	s	s
	High Accuracy	Custom (Unit Data Required)	Dual Calibration	G	s	s	s	s	s	s
	High Accuracy	Custom (Unit Data Required)	Triple Calibration	H	s	s	s	s	s	s

TABLE VII	ACCESSORY SELECTIONS								
	Bracket Type	Material							
a. Mounting Bracket	None	None	0 _ _ _	*	*	*	*	*	*	*
	Angle Bracket	Carbon Steel	1 _ _ _	*	*	*	*	*	*	*
	Angle Bracket	304 SS	2 _ _ _	*	*	*	*	*	*	*
	Angle Bracket	316 SS	3 _ _ _	*	*	*	*	*	*	*
	Marine Approved Bracket	Carbon Steel	8 _ _ _	*	*					
	Marine Approved Bracket (In-Line)	Carbon Steel	9 _ _ _			*	*	*	*	*
	Marine Approved Bracket	304 SS	4 _ _ _	*	*					
	Marine Approved Bracket (In-Line)	304 SS	A _ _ _			*	*	*	*	*
	Flat Bracket	Carbon Steel	5 _ _ _	*	*	*	*	*	*	*
	Flat Bracket	304 SS	6 _ _ _	*	*	*	*	*	*	*
	Flat Bracket	316 SS	7 _ _ _	*	*	*	*	*	*	*
b. Customer Tag	Customer Tag Type								
	No customer tag		_ 0 _ _	*	*	*	*	*	*	*
	One Wired Stainless Steel Tag (Up to 4 lines 26 char/line)		_ 1 _ _	*	*	*	*	*	*	*
	Two Wired Stainless Steel Tag (Up to 4 lines 26 char/line)		_ 2 _ _	*	*	*	*	*	*	*
c. Unassembled Conduit Plugs & Adapters	Unassembled Conduit Plugs & Adapters								
	No Conduit Plugs or Adapters Required		_ _ A0	*	*	*	*	*	*	*
	1/2 NPT Male to 3/4 NPT Female 316 SS Certified Conduit Adapter		_ _ A2	n	n	n	n	n	n	n
	1/2 NPT 316 SS Certified Conduit Plug		_ _ A6	n	n	n	n	n	n	n
	M20 316 SS Certified Conduit Plug		_ _ A7	m	m	m	m	m	m	m
	Minifast® 4 pin (1/2 NPT) (not suitable for X-Proof applications)		_ _ A8	n	n	n	n	n	n	n
	Minifast® 4 pin (M20) (not suitable for X-Proof applications)		_ _ A9	m	m	m	m	m	m	m

TABLE VIII	OTHER Certifications & Options: (String in sequence comma delimited (XX, XX, XX,....)								
Certifications & Warranty	No additional options	00	*	*	*	*	*	*	*	
	Low Temperature Rating (-50 deg C min. ambient temperature)	LT	w	w	w	w	w	w	w	
	NACE MR0175; MR0103; ISO15156 (FC33338) Process wetted parts only	FG	*	*	*	*	*	*	*	b
	NACE MR0175; MR0103; ISO15156 (FC33339) Process wetted and non-wetted parts	F7	c	c	c	c	c	c	c	
	Marine (DNV, ABS, BV, KR, LR)	MT	d	d	d	d	d	d	d	
	EN10204 Type 3.1 Material Traceability (FC33341)	FX	*	*	*	*	*	*	*	
	MID Approved Transmitter - Contact Tech Support for specific MID approved ranges	MD				v	v			
	Certificate of Conformance (F3391)	F3	*	*	*	*	*	*	*	b
	Calibration Test Report & Certificate of Conformance (F3399)	F1	*	*	*	*	*	*	*	
	Certificate of Origin (F0195)	F5	*	*	*	*	*	*	*	
	FMEDA (SIL 2/3) Certification (FC33337)	FE	j	j	j	j	j	j	j	
	Over-Pressure Leak Test Certificate (1.5X MAWP) (F3392)	TP	*	*	*	*	*	*	*	
	Cert Clean for O_2 or CL_2 service per ASTM G93	OX	e	e	e	e	e	e	e	
	PMI Certification	PM	*	*	*	*	*	*	*	
	Extended Warranty Additional 1 year	01	*	*	*	*	*	*	*	b
	Extended Warranty Additional 2 years	02	*	*	*	*	*	*	*	
	Extended Warranty Additional 3 years	03	*	*	*	*	*	*	*	
	Extended Warranty Additional 4 years	04	*	*	*	*	*	*	*	
	Extended Warranty Additional 15 years	15	*	*	*	*	*	*	*	

TABLE IX	Manufacturing Specials								
Factory	Factory Identification	0 0 0 0	*	*	*	*	*	*	*

RESTRICTIONS

Restriction Letter	Available Only with		Not Available with	
	Table	Selection(s)	Table	Selection(s)
a			VIII	FG, F7
c	Id	_ _ _ 0,N,K,D,B _ _ _	I a	D,H,K,L,8 _ _ _ _ _ _
d	IV a	C,D,G,H _ _	VIIa	1,2,3,5,6,7 _ _ _
e	Ib	_ 2 _ _ _ _ _		
f			IV b	_ F_
g			IVb	_ H, D _
h			Ie	_ _ _ _ 4, 5, 6 _ _
			VIIa	1,2,3,4,5,6,7 _ _ _
j	IV b	H	Vb	_ 1,2,6_
m	IV a	B,D, F, H _ _		
n	IV a	A,C, E, G _ _		
p			III	B- No CRN number available
t			Ia	J, K, 7, L, 8
s	Ia	A,E _ _ _ _ _ _		
u			Va	2 _ _
			VIa	C,D,G,H
v	IV a	C,D,G,H _ _	IVb	_D,F_
w	Ib	_ 1 _ _ _ _ _	VIII	FE
b	Select Only one option from this group			

Sales and Service

For application assistance, current specifications, pricing, or name of the nearest Authorized Distributor, contact one of the offices below.

ASIA PACIFIC

Honeywell Process Solutions,
(TAC) hfs-tac-support@honeywell.com

Australia
Honeywell Limited
Phone: +(61) 7-3846 1255
FAX: +(61) 7-3840 6481
Toll Free 1300-36-39-36
Toll Free Fax:
1300-36-04-70

China – PRC - Shanghai
Honeywell China Inc.
Phone: (86-21) 5257-4568
Fax: (86-21) 6237-2826

Singapore
Honeywell Pte Ltd.
Phone: +(65) 6580 3278
Fax: +(65) 6445-3033

South Korea
Honeywell Korea Co Ltd
Phone: +(822) 799 6114
Fax: +(822) 792 9015

EMEA

Honeywell Process Solutions,
Phone: + 80012026455 or
+44 (0)1344 656000

Email: (Sales)
FP-Sales-Apps@Honeywell.com
or
(TAC)
hfs-tac-support@honeywell.com

AMERICA'S

Honeywell Process Solutions,
Phone: (TAC) 1-800-423-9883 or
215/641-3610
(Sales) 1-800-343-0228

Email: (Sales)
FP-Sales-Apps@Honeywell.com
or
(TAC)
hfs-tac-support@honeywell.com

Specifications are subject to change without notice.

For more information
To learn more about SmartLine Transmitters, visit www.honeywellprocess.com
Or contact your Honeywell Account Manager

Process Solutions
Honeywell
1250 W Sam Houston Pkwy S
Houston, TX 77042

Honeywell Control Systems Ltd
Honeywell House, Skimped Hill Lane
Bracknell, England, RG12 1EB

Shanghai City Centre, 100 Jungi Road
Shanghai, China 20061

www.honeywellprocess.com

DIAMOND PARTNER
Honeywell
AUTHORIZED DISTRIBUTOR
De Gidts & Feldman BV
The Netherlands
www.dgfg.nl
De Gidts & Feldman
INSTRUMENTATION & FILTRATION

Honeywell

34-ST-03-83
February 2017
©2017 Honeywell International Inc.